馬達定時器 / MOTOR TIMER AMT-808

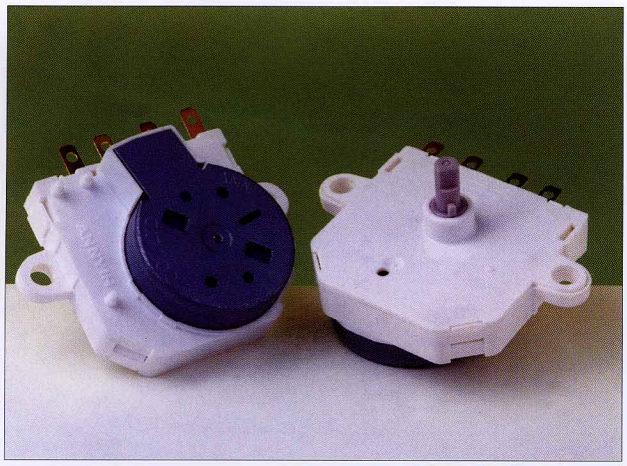

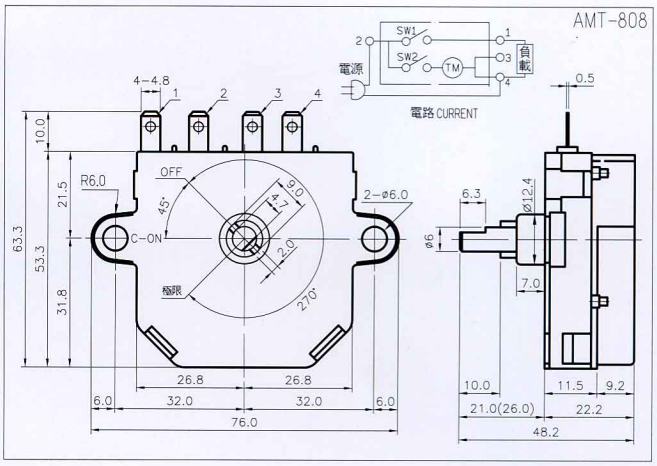

主要用途

*電風扇
*電暖器
*電熱定時器
*冷氣機
*其他電器驅動

APPLICATIONS

*Electric fan
*Heater
* Electric timers.
*Air Conditioner
*Other

機能特性

*定時動作結束，自動斷電，停止所控制的電路運轉。
*計時時間長，精確度高。
*單一回路ON-OFF設計。
*結構精密，故障率低，動作靈敏，精確實用。
*具有連續ON電路設計。

FEATURES

*It would cut the power and stop the control system, when working time to be ended.
*Long period time setting, high performance.
*Single Current System, ON-OFF.
*Nicely precise construction to minimize the operation trouble to almost zero.
*Have continuous-ON Current System.

規格 / SPECIFICATIONS

設定時間 Setting time	2.4/2H	3.6/3H	4.8/4H	6/5H	7.2/6H	9.6/8H	12/10H	14.4/ 12H
使用電壓 Working voltage	AC 100V , 110V~125V , 220V~240V							
頻率 Power Frequency	50 / 60Hz							
接點熔量 Contact capacity	AC 125V 15A AC 250V 7.5A							
操作角度 Working angle	270°							
環境溫度 Working temperature	-10° C ~ 60 ° C							
時間精度 Time accuracy	±6%							